FILE NO.	FOT213,FOT216
PART NO.	-

REVISIONS				
REV.	DESCRIPTION	DATE	ECO No.	APP'D
A	RELEASE TO PRODUCT	2010/11/05		CHANG

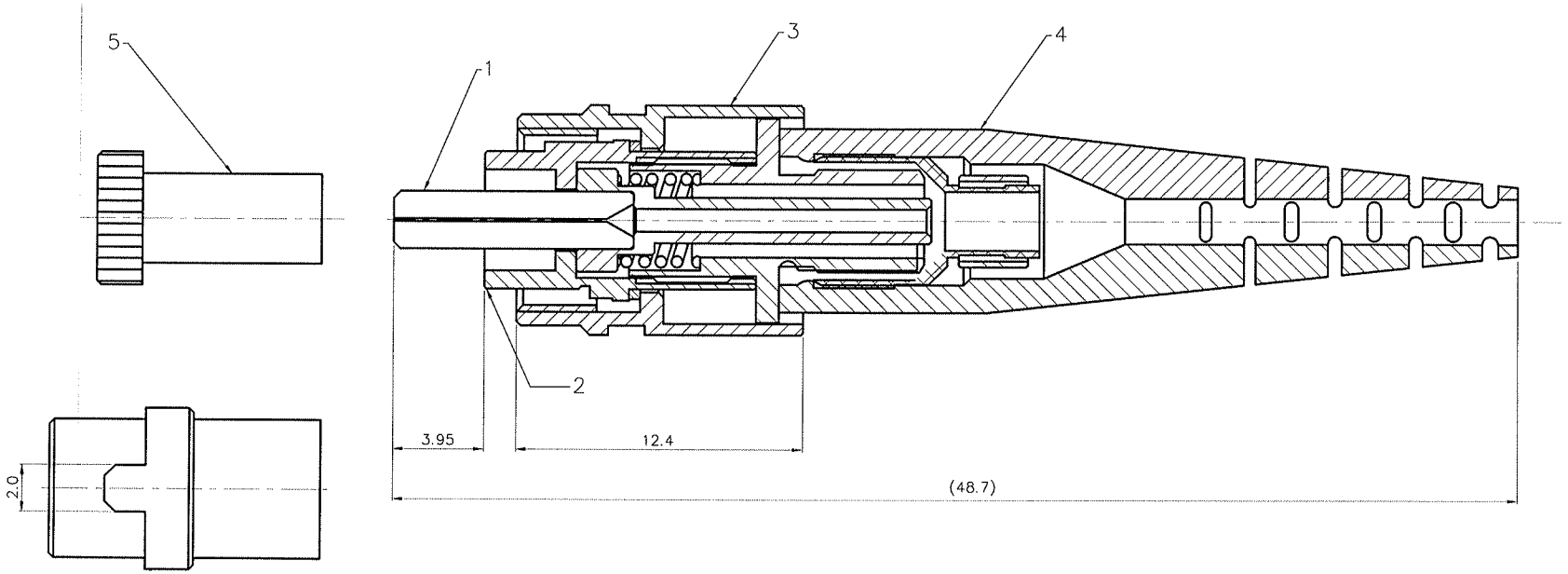

PLUG FRAME

NOTES:
1. FC CONNECTOR CONFORMS TO JIS C5970 STANDARD.
2. FERRULE I.D. S.M. 125~126μm.
   M.M. 126~128μm.
   FERRULE CONCENTRICITY 1.0μm MAX (S.M.)
   4.0μm MAX (M.M.)
3. INSERTION LOSS ≦ 0.3dB. (S.M.)
   ≦ 0.5dB. (M.M.)
   RETURN LOSS(S.M.) ≧ 45dB (PC POLISHING)
   ≧ 50dB (SPC POLISHING)
   ≧ 55dB (UPC POLISHING)
4. OPERATING TEMPERTURE: −20℃ ~ +70℃
   STORAGE TEMPERTURE: −40℃ ~ +80℃
   HUMIDUTY (NON-CONDENSING) 95% R.H.
5. ALL MATERIAL COMPLIANT WITH ROHS.
6. BLACK BOX P/N:
   S.M.: FOT213
   M.M.: FOT216

NO.	PART NAME	Q'TY	MATERIAL	PROCESSING
5	DUST CAP	1	PE	---
4	BOOT	1	PP+TPR	---
3	COUPLING NUT	1	C3604B	Ni-Plating
2	PLUG PRAME	1	ZINC #3	---
1	FERRULE	1	ZIRCONIA	---

MATERIAL			SIGNATURE	DATE
QUANTITY		DRAWN	LU	2010/11/05
		PROJECT ENGINEER	LU	2010/11/05
		CHECKED	LIU	2010/11/05
		APPROVED	CHANG	2010/11/05
		DRAWING MANAGER	CHANG	2010/11/05

Another quality product from BLACK BOX
724 746 5500 • www.blackbox.com

DWG. NAME: FC CONNECTOR 2.0mm (S.M. & M.M. ONE PIECE TYPE)

SIZE C | DWG. NO. FOT213,FOT216 | REV. A

SCALE : N/A | 2010/11/05 | SHEET 1 OF 1